TDF-A-R3 Series Single Inlet Backward Curved Centrifugal Fan

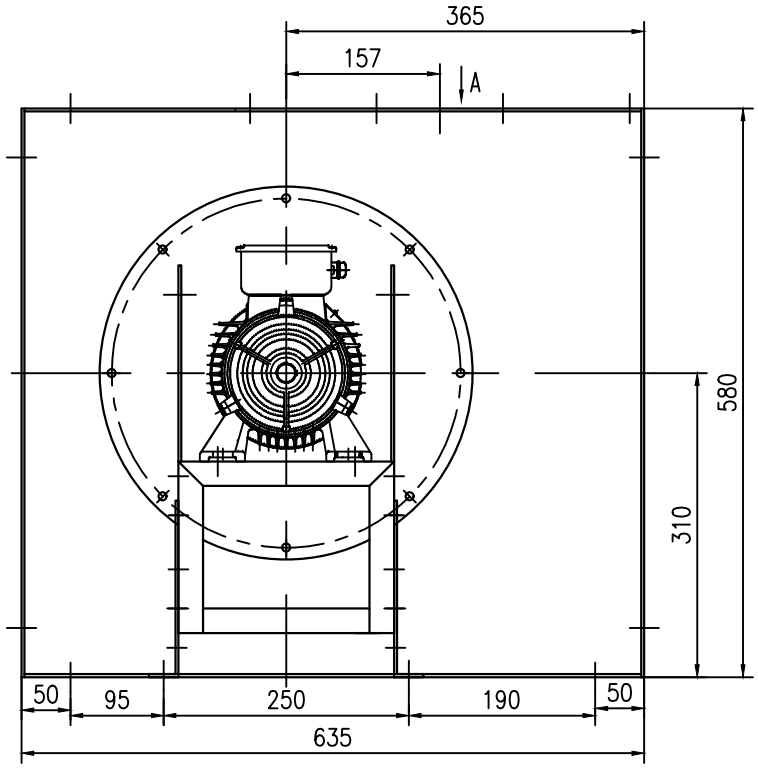

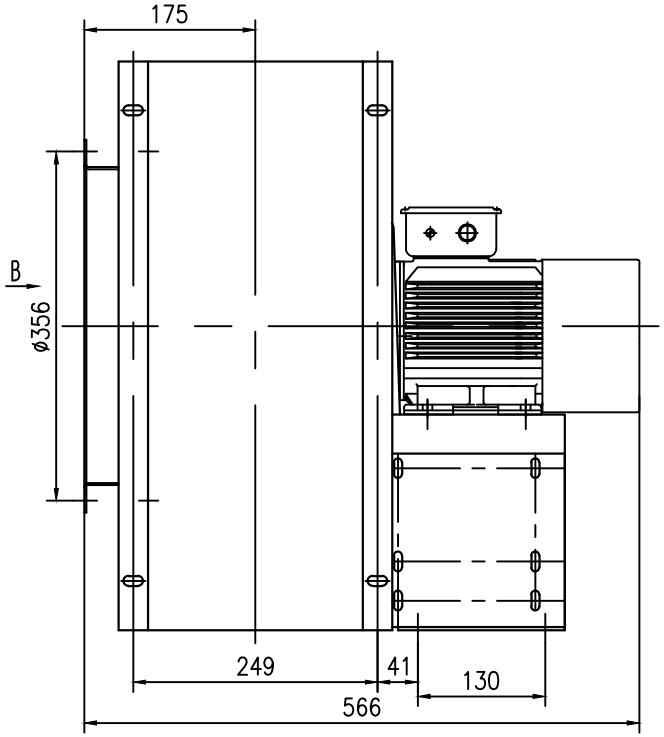

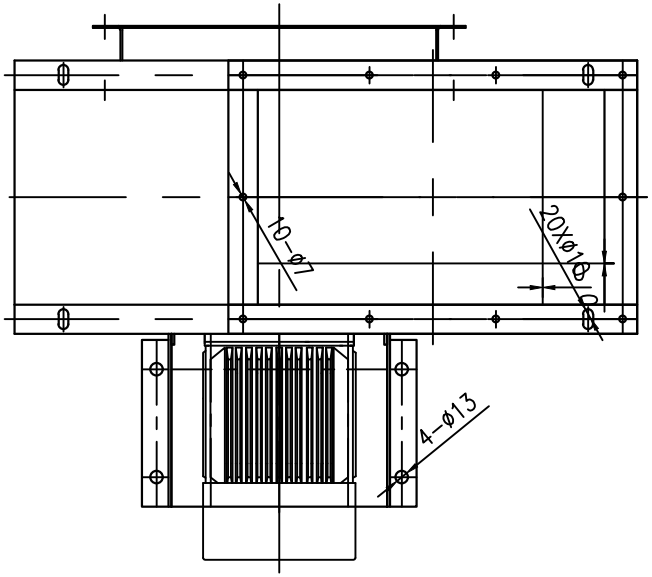

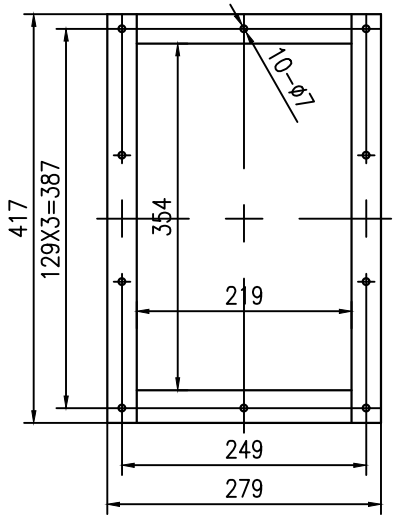

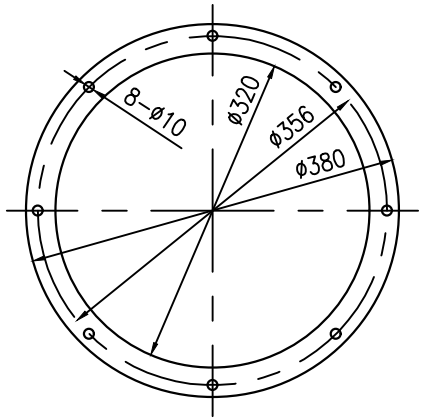

Arama & Benet

Air Engineering Solutions

info@arama-benet.com
www.arama-benet.com

PRODUCT NAME:
TDF-A-R3 Series Single Inlet Backward Curved Centrifugal Fan

PRODUCT TYPE:
TDFA 315-R3-1.5kW-2

Weight include motor:
62 kg

Finish: Painted
Color: RAL 7024

Arama and Benet reserves the right to make changes at any time and without prior notice.

Arama & Benet
www.arama-benet.com

REV 02 04.2024
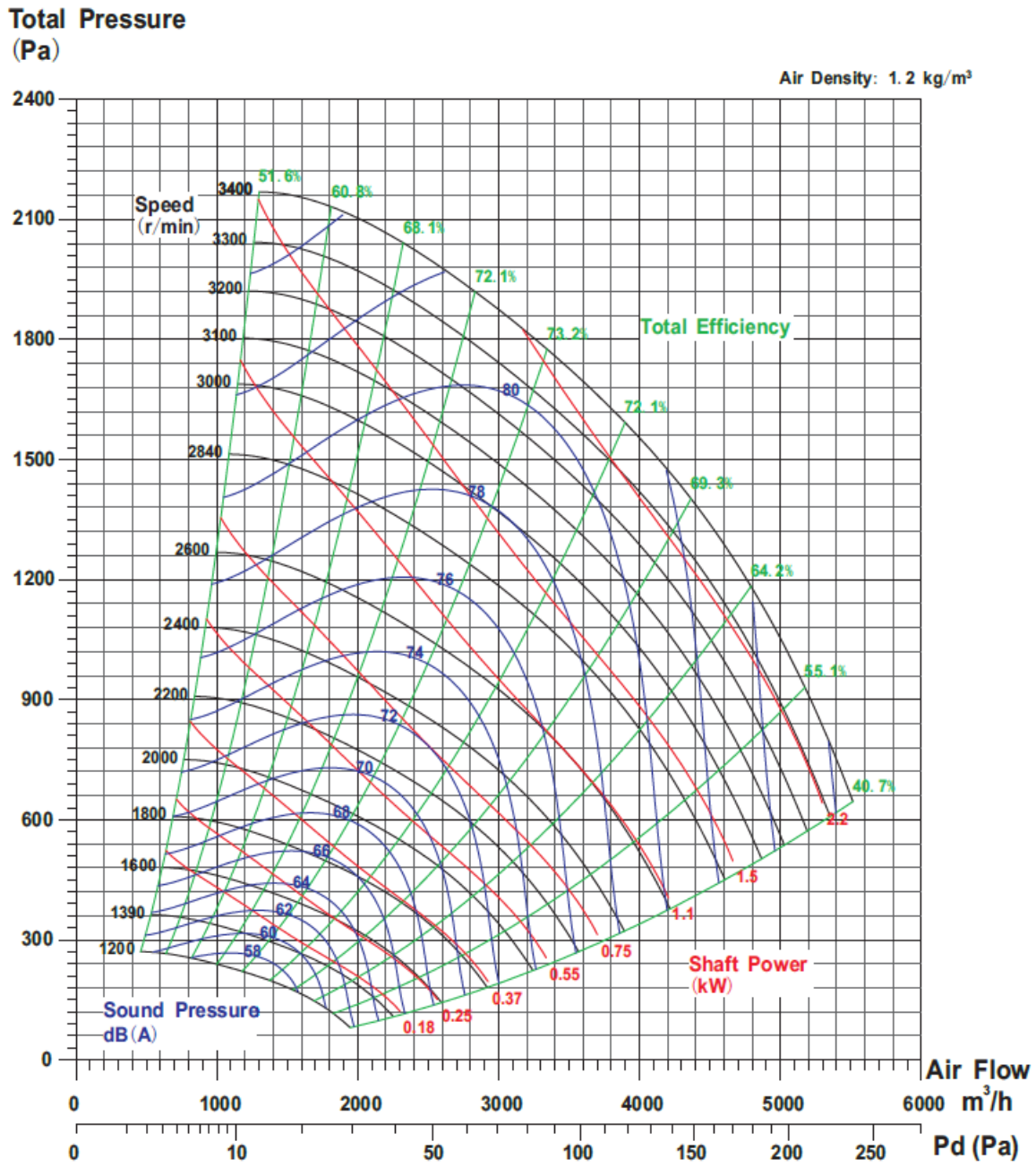
TDF315-A-R3 Performance Curve